VOL. 10, NO. 4, APRIL 2015 ISSN 1990-6145
ARPN Journal of Agricultural and Biological Science

www.arpnjournals.com

FEASIBILITY AND OPTIMIZATION STUDY OF AN HYBRID CONTINUOUS VARIABLE TRANSMISSION FOR A 4 WHEEL DRIVE TRACTOR

Luca Piancastelli, Leonardo Frizziero and Giampiero Donnici
ALMA MATER STUDIORUM University of Bologna, Department of Industrial Engineering, viale Risorgimento, Bologna, Italy
E-Mail: leonardo.frizziero@unibo.it

ABSTRACT

A new power split device between the engine, the electrical motors and the drive gears of a 4-wheel drive hybrid small tractor. The possibility of using an active electric planetary gearbox within a hybrid vehicle is analyzed. The planetary gearbox is connected to the main engine and it is contrasted by a generator in order to obtain an epicyclical continuous variable drive for the rear wheels. The generator outputs a continuously variable brake torque, from stall up to the maximum tractor speed. The stall condition will obtain the maximum reduction ratio with the annular external gear "locked". The electric power obtained in this way is recirculated to the front wheels to obtain an hybrid four wheel drive transmission system. In this paper the principle of operation of this particular hybrid vehicle is described, as well as the design principles for the electric and mechanical systems.

Keywords: 4WD, hybrid tractor, CVT, electrical vehicle.

Foreword

An example is proposed herein to explain the CVT solution. This seems to be the best way to introduce the concept. The data are taken from existing small tractors. However this example suffers from many shortcomings. For example the torque converter/clutch assembly is not included in the model. The mass of the vehicle and the many data needed for the design of a transmission are not included. The focus of this paper is on the transmission concept, not on its design. In general it is a good philosophy to keep the speeds as high as possible down to the final reduction. This is due to the fact that the mass of the transmission goes with the torque, while the power goes with the torque multiplied by the speed. It is a good policy to use the torque curve fully, from the speed where torque begins to be "reasonable" up to the maximum speed. A good design may reduce transmission mass and volume by a factor 4 from a "commercial", apparently "low cost" choice.

Transmission design requires specific knowledge about transmission components, design solutions and it should include a simulation of the dynamics. In general, it is convenient to design the vehicle around the engine and the transmission and not vice-versa. The common practical approach to design the vehicle and then to install the transmission generally outputs very slow, underpowered machines.

This paper introduces the CVT concept and the equations that can be used for its calculation. The numerical example demonstrates the feasibility of this CVT solution.

INTRODUCTION

Hybrid vehicles (HV) are becoming the key of the transition to the fully electrical vehicle (EV). Electrical energy storage is still a problem and the electrical vehicle has not enough autonomy for large distances. EV can only operate for limited distances, whereas HV is designed for long ones as well as zero emission areas, in the city center or in confined spaces. While efficiency and NOx/COx emission reduction are the main features of HV, other requirements are also important, like a continuous variable transmission and four wheel drive. At the same time one the vehicle will show a very different apparent behavior, in comparison with a traditional vehicle. In fact the HV will show four different modes, hybrid, full electric regenerative mode and "slow internal combustion engine only". The Vehicle Control Unit (VCU) manages all these modes and the driver is not obliged to look "behind the scene" to learn how he can drive such tractors. This paper deals with the power split system of a small hybrid tractor. We will first introduce a few different hybrid schemes, then we will focus on the one that is widely used around the world nowadays by Toyota, Lexus and Nissan, named the Hybrid Synergy Drive (HSD) [1, 2]. We will present the mechanical power split device used in the HSD and how we propose to replace it with a new electrically-braked planetary-gearbox. The Willis equation for the mechanical and magnetic planetary gear boxes will be used to calculate the gear ratios. At final, we will suggest the integration of one (with differential) or two electrical motors to drive the front wheels and to recirculate the energy of the planetary gearbox and of the vehicle brakes (frontal brakes only). In this way a new transmission is designed. This transmission makes it possible to have a purely electrical frontal 2WD drive, a "hybrid 4WD" or an "emergency slow internal combustion engine only" rear 2WD one.

Hybrid vehicle schemes

The main technical achievement of the Toyota Prius hybrid car is the Hybrid Synergy Drive (HSD) [1, 2]. It was previously named Toyota Hybrid System (THS), then it was renamed HSD when licensed to Lexus and Nissan. The HSD manages all the operating modes, running serial and parallel hybrid scheme. Each scheme

ARPN Journal of Agricultural and Biological Science

requires a particular ratio between the power of the engine and the electrical motor. In a series hybrid vehicle, the electrical motor is used to drive the car. The electrical power is transformed mainly from the engine that drives a generator. Hence, the electric drive motor outputs all the needed drive power. In a parallel hybrid vehicle, the traction power comes either from the engine or from the electrical motor. This latter is also used as a generator to charge the battery in regenerative mode. It generally uses a downsized electrical motor, working like a motor-starter/generator (10 kW). It is a solution used in the Honda Insight [3, 5]. The mixed solution uses both the parallel and series arrangement. This solution is the one used in the Toyota HSD [1, 4]. The HSD uses only the electric motor or the electric motor and the thermal engine in order to achieve the highest efficiency level. When necessary, the HSD drives the wheels while simultaneously generating electricity using a generator. The HSD power split device consists of a planetary gear box with three inputs/output shafts: The thermal engine one, a PMS (Permanent Magnet Synchronous) generator/motor (MG1) and a second PMS generator/motor (MG2) that is connected to the wheel through reduction gears. They are driven through 500V power inverters. A DC-DC converter raises the battery voltage from 200 V to 500V. The HSD drives the vehicle in 6 different modes. The engine stops when in an inefficient range, such as at start- up and in low range speeds. The vehicle runs then on the motor MG2 alone. The cruising engine power is divided by the power split device. Some of the power turns the generator MG1, which drives the motor MG2. The rest of the power drives the wheels directly. Power split is optimized for efficiency. When strong acceleration is required, extra power is supplied from the battery to MG2, while the engine and the serial power path provide the nominal drive power. Battery recharging Battery level is managed to maintain sufficient reserves ranging from 25% to 75% the nominal capacity. The engine drives the generator MG1 to recharge the battery when necessary at standstill or when running. When decelerating when the accelerator is lifted, the HSD uses the kinetic energy of the car to recharge the battery through the MG2, which works as a generator. At rest the engine, MG1 and MG2 are stopped immediately. No energy is wasted by idling. However, if the battery voltage is low, the battery recharging mode is activated and the engine still runs.

The power split system

The split device consists of a planetary gear box (Figure-2). The planetary gear is a system that consists of several outer gears (planet gears (2)) revolving around a central one, (sun gear (1)). The planets are mounted on a movable carrier (P) which rotates relatively to the sun gear. There is an outer ring gear (annular gear (3)), which meshes with the planet gears. The advantages of planetary gearings are high power density, larger gear reduction in a small volume and multiple kinematic combinations. The planetary gear system is used to achieve our Continuous Variable Transmission (CVT).

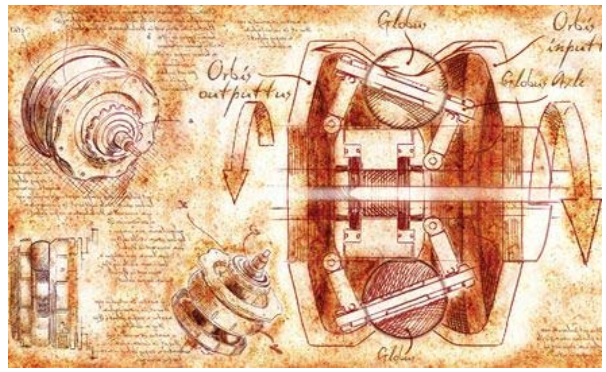

Figure-1. Da Vinci's original drawing (1490).

The concept of CVT derives from the great insight of Leonardo Da Vinci (Figure-1), which was later drawn up to our days, due to a growing need for innovation and technological improvement. CVT makes it possible vary continuously the rotational speed of the input shaft independently from the rotation speed of the output one. The largest resulting advantage is the optimization of the operating point of the engine and the consequent optimization of fuel consumption and torque.

In our case the CVT transmission is obtained by a planetary gearing. In this system the reduction ratio is achieved by powering the shaft (1) and connecting the carrier (P) to the rear wheels through reduction gears. In order to achieve the maximum reduction ratio the annular gear is kept to the slowest speed by the "braking torque" of the generator G. As the speed of the generator shaft increases the transmission ratio is reduced up to direct (τ=1) when $\omega 3 = \omega 1 = \omega P \rightarrow \omega 2 = 0$.

Table-1. Tractor data.

Symbol	Description	Value	Unit
D	Rear wheel diameter	1.19	m
V_{max}	Maximumspeed	40	km/h
V_{min}	Minimum speed	1.4	m/s
rpm_{max}	Maximum engine speed	2,600	rpm
rpm_{min}	Minimum engine speed	230	rpm
rpm_{torque}	Maximum torque engine speed	1,500	rpm
P	Maximum engine power	55.2	kW
T	Maximum engine Torque	270	Nm
i_{final}	Differential+Final reduction ratio	4	-

The tractor data are summarized in Table-1.

It is then possible to calculate the rear wheels average speed at V_{max} and V_{min} (1) (2).

$$n_{\min} = \frac{60 \times V_{\min}}{\pi D} = 6.17[rpm] \quad (1)$$

ARPN Journal of Agricultural and Biological Science

$$n_{\max} = \frac{60 \times V_{\max}}{\pi D} = 190.47[rpm] \quad (2)$$

In order to achieve V_{min} and V_{max} at rpm_{max}, the following gear ratios should be obtained i_{max}=352.487 and i_{min}=12.337. It is possible to assume that the differential and the final reductions on the wheels totalize $i_{final}=i_{min}$=12.37. The CVT should then achieve i_{cvt}=28.571. A two stage planetary gearing is then required. However, since the generator does not generate energy at stall condition (ω_3=0), it is better to increase i_{CVT}=31 (8% increase). It is divided into two stage i_1=4.2 and i_2=7.3. The "emergency condition", with the brake on the generator inserted, will then guarantee a maximum speed of 6 km/h (3).

$$V_{emergency} = \frac{rpm_{\max}}{i_{CVT} i_{final} 3.6} = 6[km/h] \quad (3)$$

The first step is to calculate τ_{12}=0.9 and τ_{34}=0.34 (4) (5).

$$\left\{ \begin{array}{l} i_1(\omega_3 = 0) = \dfrac{z_1 + z_3}{z_1} \\ \tau_{12} = \dfrac{z_1}{z_2} \\ \tau_{23} = \dfrac{z_2}{z_3} \end{array} \right\} \Rightarrow i_1(\omega_3 = 0) = 1 + \frac{1}{\tau_{12}\tau_{23}} \quad (4)$$

$$\left\{ \begin{array}{l} m_{n1} = m_{n2} = m_{n3} \\ r_1 + 2 \times r_2 = r_3 \end{array} \right\} \Rightarrow z_1 + 2 \times z_2 = z_3 \Rightarrow \tau_{12} = \frac{1}{\tau_{23}} - 2 \quad (5)$$

Then it is possible to calculate the minimum values for z_1=16.34 and z_2=11.92, by assuming k=1 (6).

$$z_{\min} = 2k \frac{1 + \sqrt{1 - (2\tau - \tau^2)\sin^2(\theta)}}{(2 - \tau)\sin^2(\theta)} \quad (6)$$

The final choice is calculate z_1=17, z_2=20 and z_3=57. The true gear ratio is then i_{1true}=4.35.

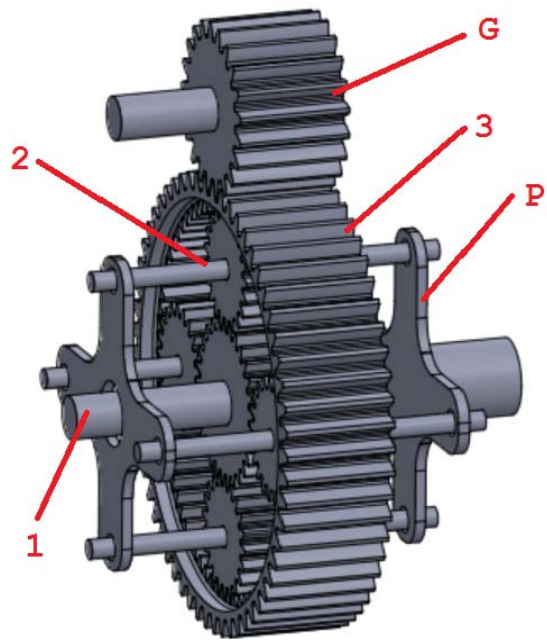

Figure-2. Planetary gearbox.

For the second epiclyc gearing with i_2=7.3, τ_{12}=0.37 and τ_{34}=0.42 are calculated (4) (5). Then the minimum values for z_1=12.15 and z_2=12.39 (6). The final choice is then z_1=13, z_2=35 and z_3=83, with i_{2true}=7.38.

The complete planetary gearing may have an efficiency of around 97% (η_{tot}=0.97). It is then possible to write the system of equations (7).

$$\left\{ \begin{array}{l} P_{diss} = C_1\omega_1(\eta_{tot} - 1) \\ P_1 = C_1\omega_1 \\ P_3 = -C_3\omega_3 \\ P_p = C_p\omega_p \\ P_1 + P_3 + P_p + P_{dis} = 0 \\ C_1 + C_3 + C_p = 0 \end{array} \right\} \quad (7)$$

Where the first equation evaluates the dissipated energy, the last is the equilibrium of the system around the rotation axis of the planetary gearing and the second-to-last is the energy conservation equation. The remaining three are the power, torque speed relations of the three shafts. Shaft p goes to the wheels through the differential and the final reduction. Shaft 3 is the annular gearing one and it is connected to the generator G through an ordinary gearing. Shaft 1 comes from the engine. The unknown are the engine torque C_1, the output torque C_p, the annular gearing torque C_3, the power output of the generator P_3, the output power to rear wheel P_p and the dissipated energy P_{diss}. At the minimum speed V_{min} with the engine at the maximum rpm, i t is possible to calculate ω_p=8.06 [rad/s] (9) and ω_3=0.89 [rad/s] (10).

ARPN Journal of Agricultural and Biological Science

$$\omega_p = n_{\min} i_{final} \frac{\pi}{30} = 8.06[rad/s] \quad (8)$$

$$\omega_3 = \omega_p - \frac{rpm_{\max}}{i_{CVT}} \frac{\pi}{30} = 0.89[rad/s] \quad (9)$$

In this condition the results of the system of equation (7) are the following: C_1=239 [Nm], C_p=-6000 [Nm], C_3=5760 [Nm], P_3=5.2 [kW], P_p=48.4 [kW] and P_{diss}=1.7 [kW]. The front wheels can then be continuously powered with P_3 (see Figure-3) that is approximately 10% of the power available from the engine.

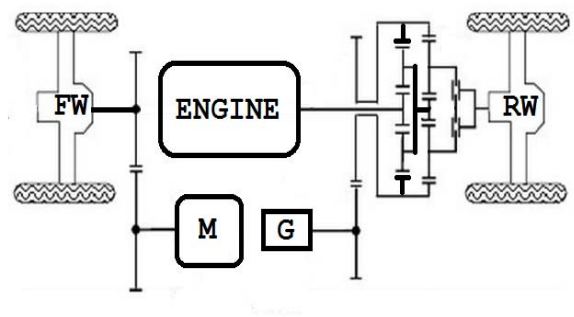

Figure-3. Proposed CVT hybrid system (one of the several possible solutions of this power split system).

Figure-3 shows a possible solution for a small hybrid tractor. This is only one of the possible transmissions for a 2 or four wheel drive concept. In this case, at low speed the engine E powers the rear wheel drive RW. A large reduction ratio from the double stage epicyclical gearbox is needed. This effect is obtained by keeping the annular gears at very low speed through the opposing torque of the generator G. G produces electrical energy that can be recirculated to the front wheel drive FW through the electric motor M or/and can charge the batteries. As speed is increased the opposing torque of the generator G is progressively reduced. In this way, the rotational speed of the annular gears is augmented. The reduction ratio of the double epicyclical gearing is reduced accordingly. Therefore, the amount of energy available from G is progressively reduced. This process ends at the top speed where the annular gear runs at the same speed of the input (engine) and output RW and no energy is available from G. An emergency "all mechanical mode" is possible by installing a brake on the generator. In this case the maximum reduction ratio is obtained. A "silent", full electric, mode can be obtained by powering the electric motor with the battery energy. Since, during the larger part of the life of the engine, the tractor runs at speeds below the maximum one, the original generator installed on the engine may be replaced by the one installed on this transmission.

The electric motor contributes to the output torque at slow speeds. It is not possible to have reverse speeds, and a reverser should be included. A clutch with a dynamic decoupling device or a torque converter should generally be included. The electric energy from the generator is recirculated to the motor, through a suitable power electronic drive. A battery is generally included in the system. The transmission is extremely compact as it can be seen in Figure-4. Several other solutions are possible on the same concept.

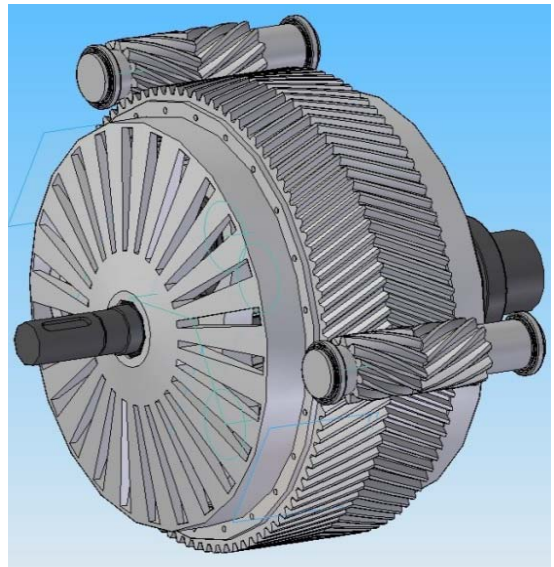

Figure-4. A solution for the first stage of the tractor.

Figure-4 shows a possible solution for the first stage of the CVT. In this case more generators are used to achieve the maximum power density. This solution makes it possible to reduce the braking torque from the single generator and to use smaller, compact, PMS generators. The ordinary gearing for the generator is also reduced since the force on teeth is shared by the two units. Ironless or "torque" generators can be also integrated into the planetary gear. Note the use of opposed helical teeth to compensate axial loads on bearings. The annular ring will rotate on two "large diameter" roller bearings.

CONCLUSIONS

This paper introduces a power split device concept for a hybrid vehicle with a planetary gearbox. The high torque, double stage, high density gearbox has the annular gear coupled to an electric generator, that controls annular-gear-speed. In this way the reduction ratio can be varied from slow to full speed. When the annular gear is moving at low rotational speed the reduction ratio is high. When the annular gear rotates as the same speed of the input shaft a direct drive (reduction ratio=1) to the final reduction is obtained. An example was calculated for a small tractor and one of the possible solutions is depicted in Figure-3. High efficiency is also obtained.

REFERENCES

[1] Hybrid Synergy Drive - Information Terminal - Toyota, available online: http://www.hybridsynergydrive.com/en/mechanism.html.

[2] Hybrid Synergy Drive http://en.wikipedia.org/wiki/Hybrid_Synergy_Drive.

[3] R. Trigui, F. Badin, B. Jeanneret, F. Harel, G. Coquery, R. Lallemand, Jp. Ousten - INRETS, M. Castagne, M. Debest, E. Gittard, F. Vangraefshepe, V. Morel - IFP, J. Labbe - Armines, L. Baghli, A. Rezzoug - GREEN, S. Biscaglia – ADEME. 2003. Hybrid light duty vehicles evaluation program. IJAT International Journal of Automotive Technology. 4(2): 65-75, June. ISSN: 1229-9138.

[4] Toyota Special reports 12, May 2003, 24 p, available online: http://www.toyota.co.jp/en/tech/environment/ths2/SpecialReports_12.pdf.

[5] K. Aoki, S. Kuroda, S. Kajiwara, H. Sato, Y. Yamamoto. 1988. Development of Integrated Motor Assist Hybrid System: Development of the 'Insight', a Personal Hybrid Coupe. In: Proceeding of Government/Industry Meeting, Washington, D.C., 19-21 June 2000. p. 10. Differentials, the Theory and Practice by Phillip Edwards, Constructor Quarterly. (1).

[6] Kenneth Macksey and John H. Batchelor. Tracked Vehicle: A History of the Armoured Fighting Vehicle.

[7] Dipl.-Ing. Peter Lückert, Dipl.-Ing. Dirk Busenthür, Dipl.-Ing. Ralf Binz, Dipl.-Ing.Heiko Sass, Dr. Marco Stotz, Dipl.-Ing.Torben Roth, Daimler AG, Stuttgart. 2012. The Mercedes-Benz Diesel Engine Powertrains for the new A- and B Class, An Innovative Integration Solution. 33rd International Vienna Motor Symposium, 26 - 27 April.

[8] Hybrid Synergy Drive – Information Terminal - Toyota, available online: http://www.hybridsynergydrive.com/en/mechanism.html.

[9] Hybrid Synergy Drive http://en.wikipedia.org/wiki/Hybrid_Synergy_Drive.

[10] R. Trigui, F. Badin, B. Jeanneret, F. Harel, G. Coquery, R. Lallemand, Jp. Ousten - INRETS, M. Castagne, M. Debest, E. Gittard, F. Vangraefshepe, V. Morel - IFP, J. Labbe - Armines, L. Baghli, A. Rezzoug - GREEN, S. Biscaglia - ADEME. 2003. Hybrid light duty vehicles evaluation program. IJAT International Journal of Automotive Technology, 4(2): 65-75, June. ISSN : 1229-9138.

[11] Toyota Special reports 12, May 2003. 24 p, available online: http://www.toyota.co.jp/en/tech/environment/ths2/SpecialReports_12.pdf.

[12] K. Aoki, S. Kuroda, S. Kajiwara, H. Sato, Y. Yamamoto. 2000. Development of Integrated Motor Assist Hybrid System: Development of the 'Insight', a Personal Hybrid Coupe. in Proc. Government/Industry Meeting, Washington, D.C., 19-21 June. p. 10.

[13] L. Piancastelli, L. Frizziero, S. Marcoppido, E. Pezzuti. 2012. Methodology to evaluate aircraft piston engine durability. edizioni ETS. International journal of heat and technology. ISSN 0392-8764. 30(1): 89-92.

[14] L. Piancastelli, L. Frizziero, G. Zanuccoli, N.E. Daidzic, I. Rocchi. 2013. A comparison between CFRP and 2195-FSW for aircraft structural designs. International Journal of Heat and Technology. 31(1): 17-24.

[15] L. Piancastelli, L. Frizziero, N.E. Daidzic, I. Rocchi. 2013. Analysis of automotive diesel conversions with KERS for future aerospace applications. International Journal of Heat and Technology. 31(1): 143-154.

[16] L. Piancastelli, L. Frizziero, I. Rocchi. 2012. An innovative method to speed up the finite element analysis of critical engine components. International Journal of Heat and Technology. 30(2): 127-132.

[17] L. Piancastelli, L. Frizziero, I. Rocchi. 2012. Feasible optimum design of a turbocompound Diesel Brayton cycle for diesel-turbo-fan aircraft propulsion. International Journal of Heat and Technology. 30(2): 121-126.

[18] L. Piancastelli, L. Frizziero, S. Marcoppido, A. Donnarumma, E. Pezzuti. 2011. Fuzzy control system for recovering direction after spinning. International Journal of Heat and Technology. 29(2): 87-93.

[19] L. Piancastelli, L. Frizziero, S. Marcoppido, A. Donnarumma, E. Pezzuti. 2011. Active antiskid system for handling improvement in motorbikes controlled by fuzzy logic. International Journal of Heat and Technology. 29(2): 95-101.

[20] L. Piancastelli, L. Frizziero, E. Morganti, E. Pezzuti. 2012. Method for evaluating the durability of aircraft piston engines. Published by Walailak Journal of Science and Technology The Walailak Journal of Science and Technology, Institute of Research and Development, Walailak University, ISSN: 1686-3933, Thasala, Nakhon Si Thammarat 80161. 9(4): 425-431, Thailand.

[21] L. Piancastelli, L. Frizziero, E. Morganti, A. Canaparo. 2012. Embodiment of an innovative system design in a sportscar factory. Published by Pushpa Publishing House. Far East Journal of Electronics and Communications. ISSN: 0973-7006, 9(2): 69-98, Allahabad, India.

[22] L. Piancastelli, L. Frizziero, E. Morganti, A. Canaparo. 2012. The Electronic Stability Program controlled by a Fuzzy Algorithm tuned for tyre burst issues. Published by Pushpa Publishing House. Far East Journal of Electronics and Communications. ISSN: 0973-7006, 9(1): 49-68, Allahabad, India.

[23] L. Piancastelli, L. Frizziero, I. Rocchi, G. Zanuccoli, N.E. Daidzic. 2013. The "C-triplex" approach to design of CFRP transport-category airplane structures. International Journal of Heat and Technology, ISSN 0392-8764, 31(2): 51-59.

[24] L. Frizziero, I. Rocchi. 2013. New finite element analysis approach. Published by Pushpa Publishing House. Far East Journal of Electronics and Communications. ISSN: 0973-7006, 11(2): 85-100, Allahabad, India.

[25] L. Piancastelli, L. Frizziero, E. Pezzuti. 2014. Aircraft diesel engines controlled by fuzzy logic. Asian Research Publishing Network (ARPN). Journal of Engineering and Applied Sciences. ISSN 1819-6608, 9(1); 30-34, EBSCO Publishing, 10 Estes Street, P.O. Box 682, Ipswich, MA 01938, USA.

[26] L. Piancastelli, L. Frizziero, E. Pezzuti. 2014. Kers applications to aerospace diesel propulsion. Asian Research Publishing Network (ARPN). Journal of Engineering and Applied Sciences. ISSN 1819-6608, 9(5): 807-818, EBSCO Publishing, 10 Estes Street, P.O. Box 682, Ipswich, MA 01938, USA.

[27] L. Piancastelli, L. Frizziero, G. Donnici. 2014. A highly constrained geometric problem: The inside-outhuman-based approach for the automotive vehicles design. Asian Research Publishing Network (ARPN). Journal of Engineering and Applied Sciences. ISSN 1819-6608, 9(6): 901-906, EBSCO Publishing, 10 Estes Street, P.O. Box 682, Ipswich, MA 01938, USA.

[28] L. Frizziero, F. R. Curbastro. 2014. Innovative methodologies in mechanical design: QFD vs TRIZ to develop an innovative pressure control system. Asian Research Publishing Network (ARPN). Journal of Engineering and Applied Sciences. ISSN 1819-6608, 9(6): 966-970, 2014, EBSCO Publishing, 10 Estes Street, P.O. Box 682, Ipswich, MA 01938, USA.

[29] L. Piancastelli, L. Frizziero. 2014. How to adopt innovative design in a sportscar factory. Asian Research Publishing Network (ARPN). Journal of Engineering and Applied Sciences. ISSN 1819-6608, 9(6): 859-870, EBSCO Publishing, 10 Estes Street, P.O. Box 682, Ipswich, MA 01938, USA.

[30] L. Piancastelli, L. Frizziero, I. Rocchi. 2014. A low-cost, mass-producible, wheeled wind turbine for easy production of renewable energy. Published by Pushpa Publishing House. Far East Journal of Electronics and Communications. ISSN: 0973-7006, 12(1): 19-37, Allahabad, India.

[31] L. Piancastelli, G. Caligiana, Frizziero Leonardo, S. Marcoppido. 2011. Piston engine cooling: an evergreen problem. 3rd CEAS Air and Space Conference - 21st AIDAA Congress - Venice (Italy), 24th-28th October.

[32] L. Piancastelli, L. Frizziero, E. Morganti, A. Canaparo. 2012. Fuzzy control system for aircraft diesel engines. Edizioni ETS. International journal of heat and technology. ISSN 0392-8764, 30(1): 131-135.

[33] L. Piancastelli, L. Frizziero, 2014. Design, study and optimization of a semiautomatic pasta cooker for coffee shops and the like. Asian Research Publishing Network (ARPN). Journal of Engineering and Applied Sciences. ISSN 1819-6608, 9(12): 2608-2617, EBSCO Publishing, 10 Estes Street, P.O. Box 682, Ipswich, MA 01938, USA.

[34] L. Piancastelli, L. Frizziero, I. Rocchi, 2014. A low-cost, mass-producible, wheeled wind turbine for easy production of renewableenergy. Asian Research Publishing Network (ARPN). Journal of Engineering and Applied Sciences. ISSN 1819-6608, 12(1): 19-37, EBSCO Publishing, 10 Estes Street, P.O. Box 682, Ipswich, MA 01938, USA.

[35] L. Piancastelli, L. Frizziero, G. Donnici, 2014. Learning by failures: The "Astura II" concept car design process. Asian Research Publishing Network (ARPN). Journal of Engineering and Applied Sciences. ISSN 1819-6608, 9(10): 2009-2015, EBSCO Publishing, 10 Estes Street, P.O. Box 682, Ipswich, MA 01938, USA.

[36] L. Piancastelli, L. Frizziero, T. Bombardi, 2014. Bézier based shape parameterization in high speed mandrel design. International Journal of Heat and Technology, ISSN 0392-8764, 32(1-2): 57-63.

[37] L. Piancastelli, L. Frizziero, 2014. Turbocharging and turbocompounding optimization in automotive racing. Asian Research Publishing Network (ARPN). Journal of Engineering and Applied Sciences. ISSN 1819-6608, 9(11): 2192-2199, EBSCO Publishing, 10 Estes Street, P.O. Box 682, Ipswich, MA 01938, USA.

[38] L. Frizziero, A. Freddi, 2014. Methodology for aesthetical design in a citycar. Asian Research

Publishing Network (ARPN). Journal of Engineering and Applied Sciences. ISSN 1819-6608, 9(7): 1064-1068, EBSCO Publishing, 10 Estes Street, P.O. Box 682, Ipswich, MA 01938, USA.

[39] E. Pezzuti, P.P. Valentini, L. Piancastelli, L. Frizziero, 2014. Development of a modular system for drilling aid for the installation of dental implants. Asian Research Publishing Network (ARPN). Journal of Engineering and Applied Sciences. ISSN 1819-6608, 9(9): 1527-1534, EBSCO Publishing, 10 Estes Street, P.O. Box 682, Ipswich, MA 01938, USA.

[40] L. Frizziero, 2014. A coffee machine design project through innovative methods: QFD, value analysis and design for assembly. Asian Research Publishing Network (ARPN). Journal of Engineering and Applied Sciences. ISSN 1819-6608, 9(7): 1134-1139, EBSCO Publishing, 10 Estes Street, P.O. Box 682, Ipswich, MA 01938, USA.

[41] L. Piancastelli, L. Frizziero, G. Donnici, 2014. Study and optimization of an innovative CVT concept for bikes. Asian Research Publishing Network (ARPN). Journal of Engineering and Applied Sciences. ISSN 1819-6608, 9(8): 1289-1296, EBSCO Publishing, 10 Estes Street, P.O. Box 682, Ipswich, MA 01938, USA.

[42] L. Piancastelli, L. Frizziero, G. Donnici, 2014. The common-rail fuel injection technique in turbocharged di-diesel-engines for aircraft applications. Asian Research Publishing Network (ARPN). Journal of Engineering and Applied Sciences. ISSN 1819-6608, 9(12): 2493-2499, EBSCO Publishing, 10 Estes Street, P.O. Box 682, Ipswich, MA 01938, USA.

[43] L. Piancastelli, L. Frizziero, 2015. Supercharging systems in small aircraft diesel common rail engines derived from the automotive field. Asian Research Publishing Network (ARPN). Journal of Engineering and Applied Sciences. ISSN 1819-6608, 10(1): 20-26, EBSCO Publishing, 10 Estes Street, P.O. Box 682, Ipswich, MA 01938, USA.

[44] L. Piancastelli, L. Frizziero, 2015. Accelerated FEM analysis for critical engine components. Published by Walailak Journal of Science and Technology The Walailak Journal of Science and Technology, Institute of Research and Development, Walailak University, ISSN: 1686-3933, Thasala, Nakhon Si Thammarat 80161. 12 (2): 151-165, Thailand.

[45] L. Piancastelli, L. Frizziero, G. Donnici, 2015. Turbomatching of small aircraft diesel common rail engines derived from the automotive field. Asian Research Publishing Network (ARPN). Journal of Engineering and Applied Sciences. ISSN 1819-6608, 10(1): 172-178, EBSCO Publishing, 10 Estes Street, P.O. Box 682, Ipswich, MA 01938, USA.

[46] L. Piancastelli, L. Frizziero. 2015. Multistage turbocharging systems for high altitude flight with common rail diesel engines. Asian Research Publishing Network (ARPN). Journal of Engineering and Applied Sciences. ISSN 1819-6608, 10(1): 370-375, EBSCO Publishing, 10 Estes Street, P.O. Box 682, Ipswich, MA 01938, USA.

[47] L. Piancastelli, L. Frizziero. 2015. A new approach for energy recovery and turbocompounding systems for high altitude flight with common rail diesel engines. Asian Research Publishing Network (ARPN). Journal of Engineering and Applied Sciences. ISSN 1819-6608, 10(2): 828-834, EBSCO Publishing, 10 Estes Street, P.O. Box 682, Ipswich, MA 01938, USA.

[48] L. Piancastelli, L. Frizziero. 2015. GA based optimization of the preliminary design of an extremely high pressure centrifugal compressor for a small common rail diesel engine. Asian Research Publishing Network (ARPN). Journal of Engineering and Applied Sciences. ISSN 1819-6608, 10(4): 1623-1630, EBSCO Publishing, 10 Estes Street, P.O. Box 682, Ipswich, MA 01938, USA.

[49] L. Piancastelli, L. Frizziero. 2015. Mapping optimization for common rail diesel conversions from the automotive to the flying applications. Asian Research Publishing Network (ARPN). Journal of Engineering and Applied Sciences. ISSN 1819-6608, 10(4): 1539-1547, EBSCO Publishing, 10 Estes Street, P.O. Box 682, Ipswich, MA 01938, USA.

[50] John J. Moskwa, PI, David E. Foster, co-PI, Gordon Wright, co-PI, Scott A. Munns, Zachary J. Rubin, Joseph W. Anthony, Wenbo Wang, University of Wisconsin-Madison Powertrain Control Research Lab - Engine Research Center, http://arc.engin.umich.edu/events/archive/annual/conf98/foster_aft.pdf.

ARPN Journal of Agricultural and Biological Science

Symbols

Symbol	Description	Unit	Value
D	Rear Wheel Diameter	m	1.114
V_{max}	Max vehicle velocity	m/s	11.11
V_{min}	Min vehicle velocity	m/s	0.36
rpm_{max}	Maximum power engine speed	rpm	2,600
rpm_{torque}	Maximum torque engine speed	rpm	1,500
P	Maximum engine power	kW	55.2
T	Maximum engine torque	Nm	270
τ_{xy}	Transmission ratio from gear "x" (input) to gear "y" (output)	-	
$i_{x,y}$	Gear ratio from gear "x" (input) to gear "y" (output)	-	
i_{final}	Differential transmission ratio	-	4
ω_p	Carrier speed	rpm	
ω_1	Sun gear speed	rpm	
ω_3	Annular gear speed	rpm	
ω^0_x	Rotational speed of the gear "x" of the equivalent ordinary gearing	rpm	
τ^0_{xy}	Transmission ratio from gear "x" (input) to gear "y" (output) or the relative ordinary gearing	-	
z_x	Number of teeth of gear "x"	-	
P_{diss}	Dissipated power	W	
P_x	Power on gear "x"	W	
C_x	Torque on gear "x"	W	
η_{tot}	Efficiency of the gearing	-	0.97
m	Electric motor		
k	Gear contact ratio	-	