VOL. 9, NO. 12, DECEMBER 2014 ISSN 1819-6608
ARPN Journal of Engineering and Applied Sciences

www.arpnjournals.com

MODELING OF NEW HIGH VOLTAGE POWER SUPPLY WITH THREE-PHASE CHARACTER FOR MICROWAVES GENERATORS WITH ONE MAGNETRON BY PHASE UNDER MATLAB SIMULINK CODE

M. Bassoui[1], M. Ferfra[1], M. Chraygane[2], M. Ould Ahmedou[3], N. Elghazal[2] and B. Bahani[2]
[1]Department of Electrical Engineering, Mohammadia's School of Engineering Mohamed V-Agdal University, Ibn Sina, Agdal - Rabat, Morocco
[2]Materials, Systems and Information of Technology Laboratory (MSTI), High School of Technology, Ibn Zohr University, Agadir, Morocco
[3]Electrical and Power Electronics, Mining School of Mauritania (EMIM), Mauritania
E-Mail: bassouimohamed@gmail.com

ABSTRACT

This original work treat the modeling of the new model of three-phase high voltage power supply for microwaves generators with one magnetron by phase under MATLAB SIMULINK code. The design of this system is composed of new three-phase transformer supplying by phase a cell doublers composed of a capacitor and a diode. Each cell in turn, supplies a single magnetron. The modeling of this new model of power supply pass obligatory by the modeling and de dimensioning of its own three-phase transformer with magnetic shunt which ensures the stabilization of the anodic current in each magnetron. This model was tested with the help of MATLAB SIMULINK code. The electrical signal obtained (voltages and currents) are curves of various sizes, periodic, non-sinusoidal and dephasing by ($2\pi/3$) between them. These signals have the same form as those of experimental and simulated of conventional power supply using a single phase transformer for one magnetron.

Keywords: microwaves, modeling, MATLAB SIMULINK, Three-phase transformer, high voltage, magnetron.

1. INTRODUCTION

Currently to supply one magnetron, the current single-phase power supply actually manufactured at the manufacturer of the power supply for magnetrons uses a single-phase transformer with magnetic shunt powering a cell doublers composed of a diode and a capacitor and one magnetron at the output of the cell. Based on the encouraging results obtained from the modeling of a new generation of single-phase HV power supplies for industrial microwaves generators with several magnetrons [1-16], this original work aims to develop a new model of high voltage power supply with a three-phase character for microwaves generators with one magnetron by phase. This will contribute to the development of the technological innovation in the manufacturing industry of the power supply for magnetron of microwave ovens for domestic or industrial use.

The modeling of this new model of three-phase power supply for one magnetron passes necessarily by the modeling and the dimensioning of its own high voltage three-phase transformer, which ensures the stabilization of the average anodic current in each magnetron. In our design of this new three-phase transformer with magnetic shunts, we use an armored structure tetrahedron type (Figure-1) to represent the equivalent magnetic circuit of the transformer, which will undoubtedly allow to reduce the congestion and the volume of this new device and makes it more economical. Therefore it ensures lower cost of implementation and maintenance of microwave generators. It is for this reason that the new design is more advantageous than the combination of three identical single-phase models connected in star.

In this paper we will implement and validate this model under MATLAB-SIMULINK. It is a π quadruple [17, 18, 19] model derived from diagram of the armored structure magnetic circuit tetrahedron type equivalent of the new three phase transformer with magnetic shunts. This model is composed of storable inductances able to translating the nonlinear saturation phenomena. The results obtained from this simulation compared with those obtained by experimental and simulated of conventional power supply using a single phase transformer for one magnetron are in good conformity.

2. PRINCIPE OF MODELING

The new three-phase transformer with magnetic shunts for the new high voltage power supply uses an armored structure tetrahedron type (Figure-1) to represent its equivalent magnetic circuit. A magnetic shunt serves to divert an important part of flux circulating between the primary and secondary windings of each phase. The primary and secondary fluxes of the three phase respectively, are added together to cross the common reluctances R_{COM} and R_{com}. Other hand, taking into account the air-gaps dimension and the magnetic state of saturation, the magnetic fluxes of air dispersion are negligible compared to one through the shunts. Hereafter, we consider the new three-phase transformer without iron losses (hysteresis loss and eddy current). And to simplify the study, we consider the Star Star (Yy) coupling between the primary and secondary windings.

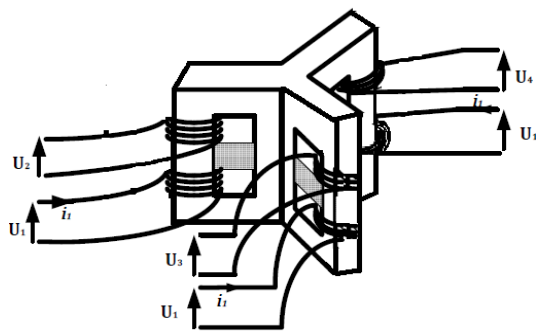

Figure-1. Form of the new three-phase transformer with magnetic shunt.

2.1. Mathematical equations and dimensioning

The primary quantities are represented by a capital letter and the secondary quantities are represented by a lowercase letter:

- r_A, r_B, r_C, ra, rb, rc: represent the primary and secondary resistances of phases A, B, C.
- i_A, i_B, i_C, ia, ib, ic: represent the currents traversing the primary and secondary windings of phases A, B, C.
- U_A, U_B, U_C, ua, ub, uc: are the primary and secondary windings voltages of phases A, B, C.
- Φ_A, Φ_B, Φ_C, Φa, Φb, Φc, Φ_{Sh}: represent the primary, secondary and shunts fluxes by turn in each phase.
- n_1, n_2: the number of primary and secondary turns for each phase.
- R_A, R_B, RC, Ra, Rb, Rc, R_{Sh},: magnetic circuit reluctances of primary, secondary and shunts of each phase, traversed respectively by the fluxes Φ_A,Φ_B, Φ_C, Φa, Φb, Φc, Φ_{Sh}.

R_{COM} and Rcom: represent the common reluctances between the three phases traversed by the common fluxe Φ_{COM} and Φcom

❖ Electrical equations

By the application of Ohm's generalized law to the primary windings (receiver convention) and secondary ones (generator convention), we obtain the six electrical equations governing the operating of the three-phase transformer.

- For the phase A:

$$U_A = r_A.i_A + n_1.\frac{\partial \Phi_A}{\partial t} \quad (1)$$

$$U_a = -r_a.i_a + n_2.\frac{\partial \Phi_a}{\partial t} \quad (2)$$

- For the phase B:

$$U_B = r_B.i_B + n_1.\frac{\partial \Phi_B}{\partial t} \quad (3)$$

$$U_b = -r_b.i_b + n_2.\frac{\partial \Phi_b}{\partial t} \quad (4)$$

- For the phase C:

$$U_C = r_C.i_C + n_1.\frac{\partial \Phi_C}{\partial t} \quad (5)$$

$$U_c = -r_c.i_c + n_2.\frac{\partial \Phi_c}{\partial t} \quad (6)$$

By writing each total flux in the form: n.Φ= Li, the previous equations become:

$$U_A = r_A.i_A + n_1.\frac{\partial}{\partial t}(L_A.i_A) \quad (7)$$

$$U_a = -r_a.i_a + n_2.\frac{\partial}{\partial t}(l_a.i_a) \quad (8)$$

$$U_B = r_B.i_B + n_1.\frac{\partial}{\partial t}(L_B.i_B) \quad (9)$$

$$U_b = -r_b.i_b + n_2.\frac{\partial}{\partial t}(L_b.i_b) \quad (10)$$

$$U_C = r_C.i_C + n_1.\frac{\partial}{\partial t}(L_C.i_C) \quad (11)$$

$$U_c = -r_c.i_c + n_2.\frac{\partial}{\partial t}(L_c.i_c) \quad (12)$$

❖ Magnetic equations

From the diagram of the equivalent magnetic circuit of the new three-phase transformer with hunts (Figure-2) and by applying the Hopkinson's law, we can write the magnetic equations for each phase of the new three-phase transformer with magnetic shunts.

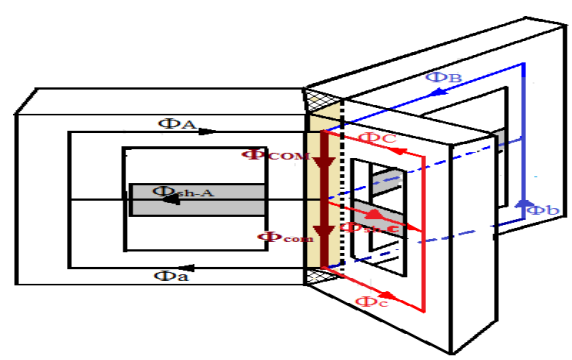

Figure-2. Magnetic circuit of type tetrahedron of the new three-phase transformer with magnetic shunts.

We take the phase A as example:

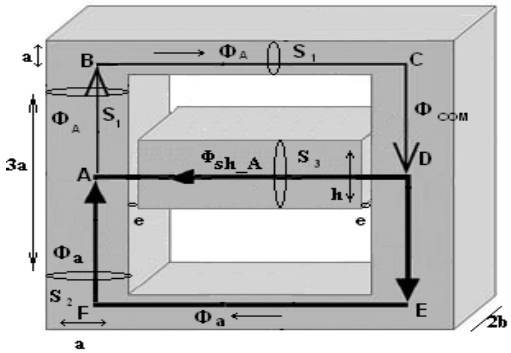

Figure-3. Diagram of the equivalent magnetic circuit of the new transformer (Phase A as example).

- for the ride ABCDA:

$$(R_{AB}+R_{BC})\Phi_A + R_{CD}.\Phi_{COM} + R_{AD}.\Phi_{sh-A} = n_1.i_A$$

By posing:
$R_A = (R_{AB}+R_{BC}), R_{COM} = R_{CD}, R_{sh-A} = R_{DA}$
The previous equation becomes:

$$R_A\Phi_A + R_{COM}.\Phi_{COM} + R_{sh-A}.\Phi_{sh-A} = n_1.i_A \quad (13)$$

- for the ride ADEFA:

$$-R_{AD}.\Phi_{sh-A} + (R_{EE}+R_{FA}).\Phi_a + R_{DE}.\Phi_{com} = -n_2.i_a$$

By posing: $R_a = (R_{EE}+R_{FA}), R_{com} = R_{DE}$
The previous equation becomes:

$$-R_{sh-A}.\Phi_{sh-A} + R_a.\Phi_a + R_{com}.\Phi_{com} = -n_2.i_a \quad (14)$$

- for the ride BCEFA:

$$R_A.\Phi_A + R_{COM}.\Phi_{COM} + R_a.\Phi_a + R_{com}.\Phi_{com} = n_1.i_A - n_2.i_a \quad (15)$$

In balanced three-phase system the fluxes Φ□□□ (the flow through the central core of primary side) and Φ□□□ (the flow through the central core of secondary side) are considered zero because they are the composition of three balanced flow.

$$\Phi_{COM} = \Phi_A + \Phi_B + \Phi_C = 0 \quad (16)$$

$$\Phi_{com} = \Phi_a + \Phi_b + \Phi_c = 0 \quad (17)$$

So the previous equations become:

$$R_A\Phi_A + R_{sh-A}.\Phi_{sh-A} = n_1.i_A \quad (18)$$

$$-R_{sh-A}.\Phi_{sh-A} + R_a.\Phi_a = -n_2.i_a \quad (19)$$

$$R_A.\Phi_A + R_a.\Phi_a = n_1.i_A - n_2.i_a \quad (20)$$

The Equations (18) to (20) are supplemented by additional relationships reflecting the law of conservation of flux per phase.

$$\Phi_A = \Phi_a + \Phi_{sh-A} \quad (21)$$

$$\Phi_B = \Phi_b + \Phi_{sh-B} \quad (22)$$

$$\Phi_C = \Phi_c + \Phi_{sh-C} \quad (23)$$

2.2. Equivalent scheme of the new transformer
We take always the phase A as example:

$$U_A = r_A.i_A + n_1.\frac{\partial\Phi_A}{\partial t} \quad (24)$$

$$U_a = -r_a.i_a + n_2.\frac{\partial\Phi_a}{\partial t} \quad (25)$$

Multiplying the equation (24) by (n_2/n_1) and writing the quantity (n1.ΦA) as $(n_1.\Phi_A = n_1(\frac{n_2}{R_A})(\frac{R_A}{n_2})\Phi_A)$, we obtain:

$$U'_A = r'_A.i'_A + n_2.\frac{\partial\Phi_A}{\partial t}$$

$$= r'_A.i'_A + \frac{\partial}{\partial t}(\frac{n_2^2}{R_A}.\frac{R_A}{n_2}\Phi_A)$$

With: $(U'_A = \frac{n_2}{n_1}U_A)$, $(r'_A = (\frac{n_2}{n_1})^2.r_A)$ and $(i'_A = \frac{n_1}{n_2}i_A)$

By posing the inductance $(L'_{P-A} = \frac{n_2^2}{R_A})$ and the electric current $(i'_{P-A} = \frac{R_A.\Phi_A}{n_2})$. The previous equation becomes:

$$U'_A = r'_A.i'_A + \frac{\partial}{\partial t}(L'_{p-A}.i'_{p-A}) \quad (26)$$

We replace $n_2.\Phi_a$ in the equation (25) by $(n2.\Phi a = \frac{n_2^2}{R_a}.\frac{R_a}{n_2}.\Phi_a)$ and by posing the inductance $(L_{s-a} = \frac{n_2^2}{R_a})$ and the electric current $i_{s-a} = \frac{R_a.\Phi_a}{n_2}$ we obtain:

$$U_a = -r_a.i_a + \frac{\partial}{\partial t}(L_{s-a}.i_{s-a}) \quad (27)$$

Using the equation (21) and writing the value $n2.\Phi a$ in the form $(n2.\Phi a = \frac{n_2^2}{R_a}.\frac{R_a}{n_2}.\Phi_a)$ and the value $n_2.\Phi_{sh-A}$ as $(n_2.\Phi_{sh-A} = \frac{n_2^2}{R_{sh-A}}.\frac{R_{sh-A}}{n_2}.\Phi_{sh-A})$. The development of the auto-induction force expression $n_2.\frac{\partial \Phi_A}{\partial t}$ can lead to the following relation:

$$n_2.\frac{\partial \Phi_A}{\partial t} = \frac{\partial}{\partial t}\left(\frac{n_2^2}{R_a}\right)\left(\frac{R_a.\Phi_a}{n_2}\right) + \frac{\partial}{\partial t}\left(\frac{n_2^2}{R_{sh-A}}\right)\left(\frac{R_{sh-A}.\Phi_{sh-A}}{n_2}\right)$$

By posing $(L'_{sh-A} = \frac{n_2^2}{R_{sh-A}})$ and the current $(i'_{sh-A} = \frac{R_{sh-A}.\Phi_{sh-A}}{n_2})$ the previous equation becomes:

$$n_2.\frac{\partial \Phi_A}{\partial t} = \frac{\partial}{\partial t}(L_{s-a}.i_{s-a}) + \frac{\partial}{\partial t}\left(L'_{sh-A}.i'_{sh-A}\right) \quad (28)$$

Using the equations (18) and (19) we can arrive at the expressions:

$$\frac{n_1}{n_2} i_A = \frac{R_A \Phi_A}{n_2} + \frac{R_{sh-A}.\Phi_{sh-A}}{n_2}$$

$$i_a = \frac{-R_{sh-A}.\Phi_{sh-A}}{n_2} + \frac{R_a.\Phi_a}{n_2}$$

These expressions can be written in the form:

$$i'_A = i'_{p-A} + i'_{sh-A} \quad (29)$$

$$i_{s-a} = i'_{sh-A} + i_a \quad (30)$$

The equations (26) to (30) respond to equivalent circuit referred to secondary for the first phase of the new three-phase transformer with magnetic shunts (Figure-4). Everything happens as if each phase of the three-phase HV transformer with magnetic shunts is composed of three ideal transformers; each one supplying a quadruple π composed of three inductive elements L'_{p-} on the primary side, Ls- on the secondary side and L'Sh- on the shunts side.

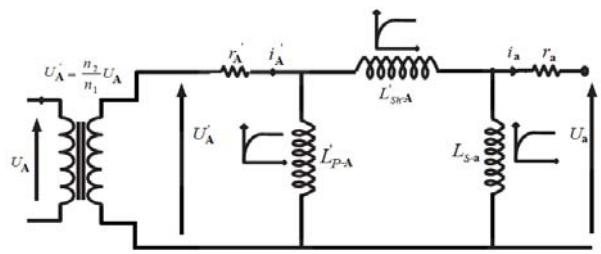

Figure-4. Quadruple model of storable inductances referred to secondary equivalent of new three-phase transformer with magnetic shunts.

According to the model established the reluctance R_{sh-A} is the reluctance corresponding to the path DA (Figure-2). It corresponds to the reluctance of the ferromagnetic part $(R_{sh-A})^f$ and the reluctance constant $(R_{sh-A})^e$ caused by the air of the air gap, hence:

$$R_{sh-A} = (R_{sh-A})^f + (R_{sh-A})^e \quad (31)$$

With: $(R_{sh-A})^f = \frac{l_{sh-A} - 2*e}{\mu.S3}$ and $(R_{sh-A})^e = \frac{2*e}{\mu_0.S3}$

By writing the expression of the L'Sh-A according to $(R_{sh-A})^f$ and $(R_{sh-A})^e$, it comes:

$$L'_{sh-A} = \frac{n_2^2}{(R_{sh-A})^f + (R_{sh-A})^e} = \frac{\frac{n_2^2}{(R_{sh-A})^f} * \frac{n_2^2}{(R_{sh-A})^e}}{\frac{n_2^2}{(R_{sh-A})^f} + \frac{n_2^2}{(R_{sh-A})^e}}$$

By posing:

$$(L'_{sh-A})^f = \frac{n_2^2}{(R_{sh-A})^f} \text{ and } (L'_{sh-A})^e = \frac{n_2^2}{(R_{sh-A})^e}$$

We obtain thus:

$$L'_{sh-A} = \frac{(L'_{sh-A})^f * (L'_{sh-A})^e}{(L'_{sh-A})^f + (L'_{sh-A})^e} \quad (32)$$

We know that the inductance $L'_{sh-A} = \frac{n_2^2}{(R_{sh-A})}$ covered by the current i'_{Sh-A} obeys the law: $(n_2.\Phi_{sh-A} = L'_{sh-A}.\Phi_{sh-A})$

Other hand, the current expression i'Sh-A becomes:

$$i'sh-A = \frac{R_{sh-A} * \Phi_{sh-A}}{n2} = \frac{(R_{sh-A})^f * \Phi_{sh-A}}{n2} + \frac{(R_{sh-A})^e * \Phi_{sh-A}}{n2}$$

by posing:

$$(i'sh-A)^f = \frac{(R_{sh-A})^f * \Phi_{sh-A}}{n2} \quad (i'sh-A)^e = \frac{(R_{sh-A})^e * \Phi_{sh-A}}{n2}$$

We obtain thus:

$$n_2.\Phi_{sh-A} = (L'_{sh-A})^f * (i'_{sh-A})^f + (L'_{sh-A})^e * (i'_{sh-A})^e \quad (33)$$

From equations (31), (32) and (33), we find thus that the inductance L'Sh-A is equivalent to two inductances $(L'Sh\text{-}A)^e$ and $(L'Sh\text{-}A)^f$ in parallel. The π quadruple model of the three phase transformer with shunts in Figure-3 is slightly modified, it becomes equivalent to that of Figure-5.

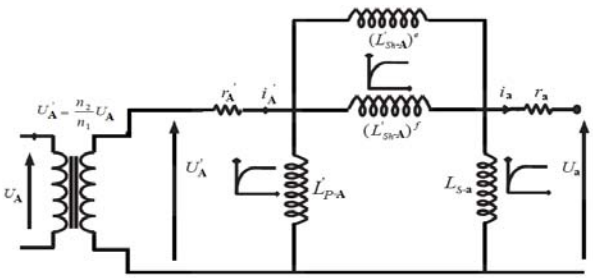

Figure-5. New quadruple model of three-phase transformer with shunts.

By perfectly similar calculations, the equation system which responds to the equivalent diagram of the phase B and C permits to find the models indicated on the Figure-6.

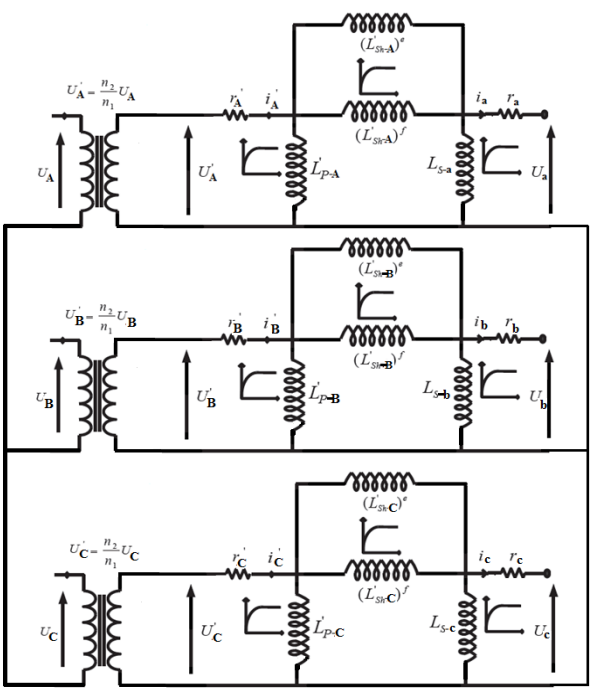

Figure-6. New model of the new three-phase transformer with magnetic shunts.

In perfect transformer input of phases A, B, C, we have the currents i_A, i_B, i_C and the voltages U_A, U_B, and U_C. And in its outputs, we find the voltages $U'_A = (n_2/n_1)\ U_A$, $U'_B = (n_2/n_1)\ U_B$ and $U'_C = (n_2/n_1)\ U_C$ and the currents $i'_A = (n_1 / n_2).\ i_A$, $i'_B = (n_1/n_2)\ i_B$ and $i'_C = (n_1/n_2)\ i_C$. Finally we obtain to the output terminals of these quadruples the real voltage of output of three-phase transformer with shunt ua, ub,uc.

3. VALIDATION OF THE NEW MODEL OF THE NEW POWER SUPPLY UNDER MATLAB SIMULINK

3.1. Simulation with Matlab - Simulink the nominal functioning of the new three-phase power supply

the model of the new transformer is integrated in the new High voltage power supply circuit from the source to the magnetrons (Figure-8). Each magnetron is represented by an equivalent diagram deduced from its electrical characteristics which is formally similar to that of a diode with dynamic resistance R=350 Ohms and threshold voltage E=3800 Volts.

The nonlinear inductors [20, 21] studied in Figure-6 depend on the reluctance of the magnetic circuit portion with a section S and average length l. Each one is represented by its characteristic Φ(i) derived from the relation L(i)=(n2 Φ (i) / i) determined from the magnetization curve B (H) of the material used and the geometrical dimensions of the transformer. A specific routine was developed in MATLAB to derive the pair of values (i, Φ) from those (H, B) and geometric data for the three inductors using the relation: Φ(*i*)=n2*B*S and i=(H*l)/n2.

- For the primary inductance L'p-A:

$$i'_{p-A} = \frac{l_p}{n_2} * H, \Phi_A = n_2 * B * S_1$$

- For the secondary inductance Ls-a:

$$i_a = \frac{l_s}{n_2} * H, \Phi_a = n_2 * B * S_2$$

- For the shunt inductance L'sh-a:

$$i_{sh-A} = \frac{l_{sh}}{n_2} * H, \Phi_{sh-A} = n_2 * B * S_3$$

The implementation of each nonlinear inductance in MATLAB-SIMULINK code was performed using the following blocks (Figure-7):

- An integrator to convert the voltage in flow.
- A (lookup table i= Φ(*i*)) function, which accepts a large number of N points relating to the currents.
- An imposed current source

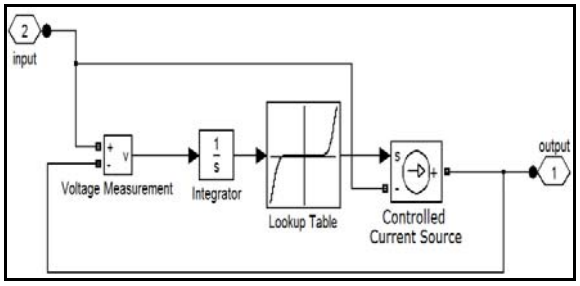

Figure-7. Diagram block of one non-linear inductance.

Each inductor of the Figure-6 is replaced by its equivalent block, and then we introduce them in the overall scheme of the new three-phase power supply with one magnetron by phase to be suitable for the modeling of the whole device (Figure-8).

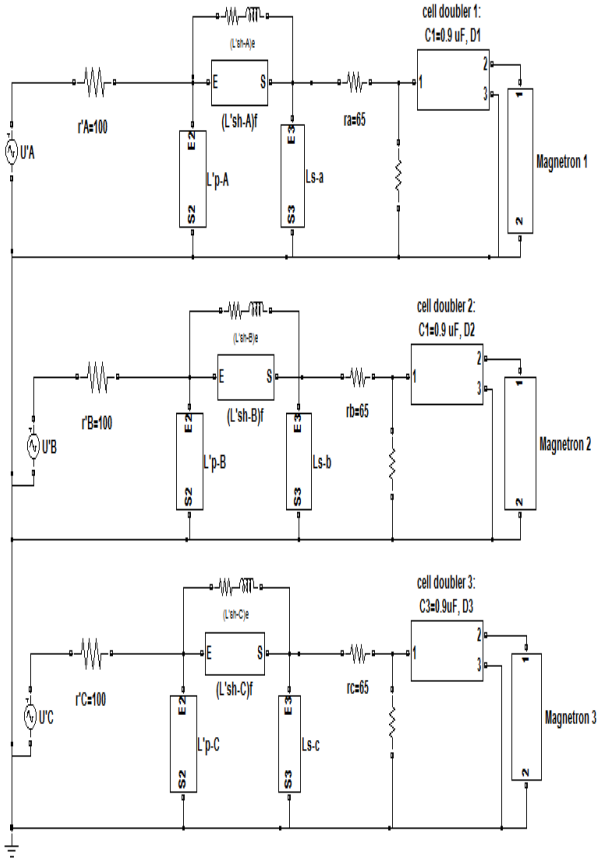

Figure-8. Diagram of the three-phase power supply simulated with MATLAB SIMULINK (one magnetron by phase).

We validate this model by comparing simulation results with those obtained from tests already carried out [2]-[17] of conventional power supply using a single phase transformer for one magnetron.

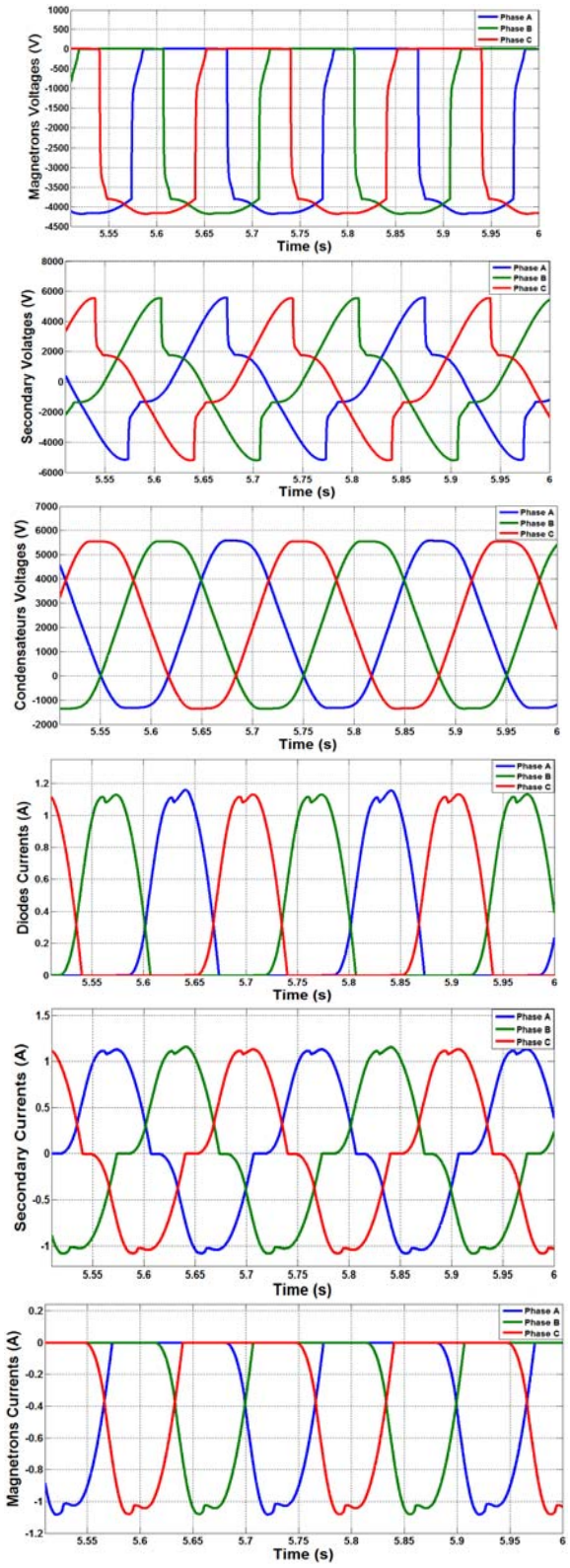

Figure-9. Simulation with MATLAB SIMULINK: Forms of currents and voltages waves.

Experimental setup and results

The Figure-10 shows the experimental setup for measuring of the characteristics current and voltage of the high voltage power supply for magnetron in nominal operation. This test was performed in the department of electrical engineering of higher School of Technology in Agadir (Marocco).

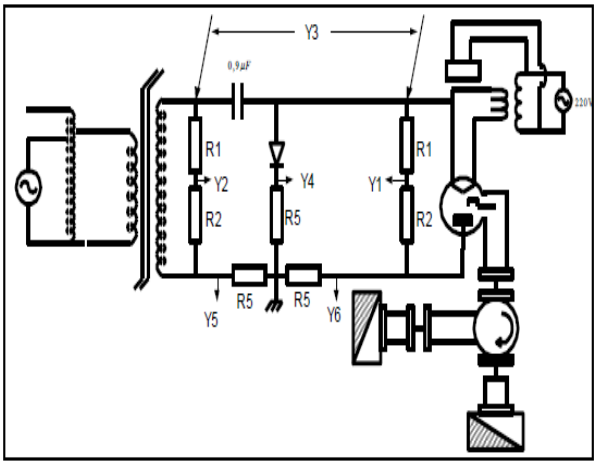

Figure-10. Experimental set up for measuring of the characteristics: current and voltage of the power supply HV for magnetron innominal operation.

Y1 : magnetron voltage,
Y2 : secondary voltage,
Y3 : condansator voltage,
Y4 : diode current,
Y5 : secondary current,
Y6 : magnetron current,
R1= 10MΩ, R2=10 KΩ, R3=22 Ω

To validate this model, we performed a test on a microwave generators composed of the following elements:

- High voltage transformer with magnetic shunts possesses the nominal characteristics : f=50 Hz, S=1650 VA, U_1=220 V, and vacuum U_2=2330V
- Primary resistance referred to secondary r_1'=100 Ω, secondary resistance r_2=65 Ω.
- Number of turns in primary *n1*=224, number of turns in secondary n_2 = 2400.
- A capacitor C = 0.9 µF and a high-voltage diode DHT.
- A magnetron designed to function under a voltage approximately 4000 V. To obtain its nominal power, it needs an average current Imean=300 mA, but without exceeding the peak current which might destroy it (Ipeak < 1, 2 A).

The experimental curves are presented in Figure-11. The first three curves represent the shapes of voltage quantities while the last ones represent current patterns;

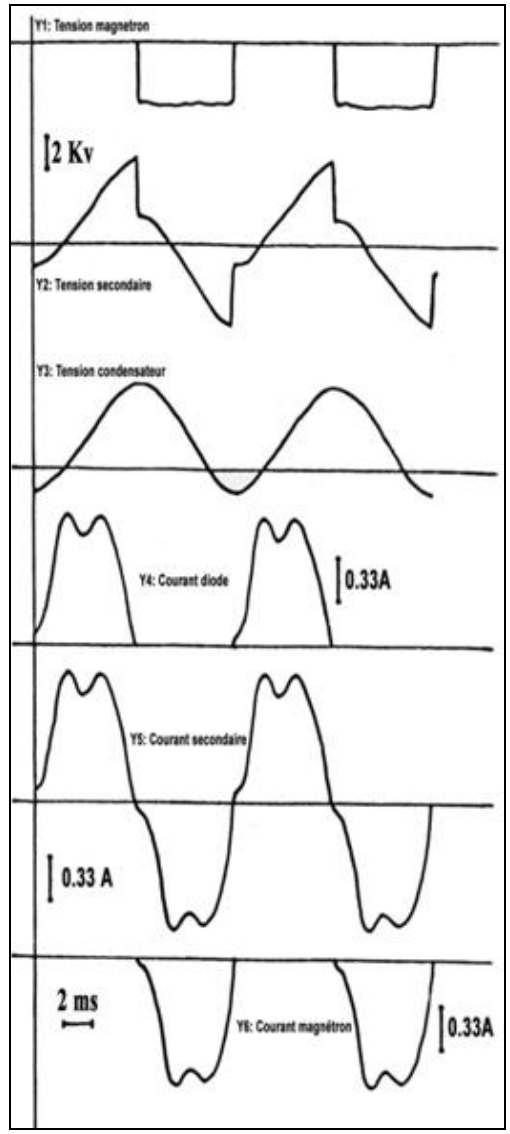

Figure-11. Experimental waveforms of currents and voltages of conventional power supply using a single phase transformer for one magnetron (Nominal state)

The electrical signal obtained (voltages and currents) from simulation with MATLAB SIMULINK are curves of various sizes, periodic, non-sinusoidal and dephasing by (2 π /3) between them. These signals have the same form as those of experimental and simulated of conventional power supply using a single phase transformer for one magnetron, in particular, the maximum value of the magnetron current which respect the constraint imposed by the manufacturer (I_{max}<1.2 A).

Based on encouraged result obtained previously, the new form of our three-phase transformer becomes that shown in Figure-12. The fluxes $\Phi_{COM} = \Phi_A + \Phi_B + \Phi_C$ (the flow through the central core of primary side) and $\Phi_{com} = \Phi_a + \Phi_b + \Phi_c$ (the flow through the central core

of secondary side) are considered zero, because they are the composition of three balanced flow. So this central core is therefore not necessary. This leads to reducing the volume of the transformer and the weight and the cost of the entire system of the high voltage power supply. This new three-phase transformer present a minimum volume compared to the one already studied [22, 23].

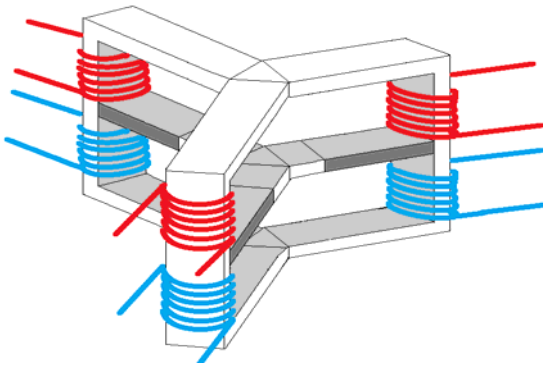

Figure-12. New type of magnetic circuit of the new three-phase transformer with magnetic shunt.

CONCLUSIONS

The modeling of a new model of high voltage power with a three-phase character supplying one magnetron by phase has been inconclusive. It can be extended without any problem in case of new three-phase or six-phase power supply for several magnetrons by phase.

For industrial applications, this modeling of the new three-phase power supply for one magnetron by phase; will certainly encourage us to realize the new three-phase transformer with magnetic shunts for a new generation of industrial microwaves generators. This will contribute to the technological innovation.

As perspectives, an optimization strategy can also be defined using MATLAB SIMULINK code, to reduce the volume of the three-phase transformer and the weight and the cost of the entire system of the high voltage power supply.

APPENDIX

- **Geometry of transformer with magnetic shunts**

The distribution of primary, secondary and shunts fluxes in each phase, is the same as that one of single-phase HV transformer with shunts, This leads us to deduce the geometry of the magnetic circuit of the new three-phase transformer from that of single-phase transformer with magnetic shunts.

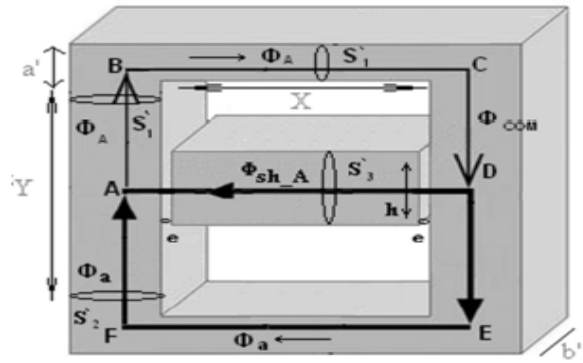

Figure-13. Geometry of transformer with magnetic shunts.

The section S'1 must be equal to the section of single-phase transformer with magnetic shunts S_1:

- S'_1=a'*b'
- S_1==2*a*b

Thus, we have two solutions for the geometry of this new three phase transformer with shunts:

- a'=a and b'=2*b
- a'=2*a and b'=b

As the section S'3 must be the double of the section S3.

- S'_3=h'*b'
- S_3=h*b
- S'_3=2* S_3

From previous relationships we find that the solution: a'=a=25 mm and b' = b*2 =120 mm is more realizable

- **Determination of X and Y calculated from the reluctances:**

The primary and shunts reluctances that correspond to paths respectively ABCD and AD must therefore be equal to those in case of single phase. That allows us to obtain the system of equations:

- $\frac{1}{2}Y + \frac{1}{2}*a + \frac{1}{2}*a + X + \frac{1}{2}a + \frac{1}{2}a + \frac{1}{2}Y = 6.5*a$
- $\frac{1}{2}*a + X + \frac{1}{2}*a - 2*e = 2.5*a - 2*e$

From the previous equation we obtain:

- X=1.5*a
- Y=3*a

Thus we obtain the following geometrical dimensions of the new three-phase transformer with magnetic shunts:

- The width of the non-wound core: a = 25 mm
- The width of the magnetic circuit: b = 120 mm
- Number of stacked sheets of the shunt: $n_3 = 18$
- Number of turns in the primary: $n_1 = 224$
- Number of secondary turns: $n_2 = 2400$
- Height of the sheet stack of shunts: h = 0.5* n3 mm
- Surface of the core: $S_1 = S_2 = a*b$
- Surface of shunt: $S_3 = b*h$
- Thickness of the air gap: e = 0.75 mm
- L_p=4.5*a (correspond to the path ABC)
- L_s=4.5*a(correspond to the path AFE)
- L_{sh}=2.5*a-2*e(correspond to the path AD)

REFERENCES

[1] David Greene J., Gross C, A. 1998. Non linear modeling of transformers. IEEE Transactions on Industry Applications. No. 3.

[2] Chraygane M., ferfra M. and Hlimi B. 2005. Modélisation d'une alimentation haute tension pour générateurs micro-ondes industriels à magnétron, La Revue 3EI, Paris, France. 41 : 37-47.

[3] Dorgelot E.G. 1980. Philips, Technishe Rundschau. 21934: 103-109.

[4] Naama El Ghazal, M.Ould. Ahmedou, M. Chraygane, M. Ferfra, A. Belhaiba. 2012. Optimization of high voltage power supply for industrial microwave generators for one magnetron. Journal of Theoretical and Applied Information Technology. 46(1): 001-010.

[5] Chraygane M, Teissier M., Jammal A. et Masson J.P. 1994. Modélisation d'un transformateur à shunts utilisé dans l'alimentation H.T d'un générateurs micro-ondes à magnétron, publication, journal de physique III, pp. 2329-2338, France.

[6] Bahani Boubkar, Mohammed Ferfra, Mohammed Chraygane, M. Bousseta, N. El Ghazal, A. Belhaiba. 2014. Modeling and Optimization of a New Single-Phase High Voltage Power Supply for Industrial Microwave Generators. International Review of Electrical Engineering (IREE). 9(1): 136-145.

[7] M. Ould. Ahmedou, M. Ferfram R. Nouri M. 2011. Chraygane Improved Model of the Leakage Flux Transformer Used for Magnetrons, International Conference on Multimedia Computing and Systems. IEEE Conference, from 07 to 09, Ouarzazat (Morocco).

[8] M. Chraygane, M. Ferfra, B. Hlimi. 2008. Détermination analytique des flux et des courants du transformateur à fuites d'une alimentation haute tension à magnétron pour générateurs micro-ondes industriels 800 Watts à 2450 Mhz. Journal of Physical and Chimical News. 40: 51-61.

[9] M.Ferfra, M.Chraygane, M.Fadel, Ould Ahmedou. 2010. Non linear modelling of an overall new high voltage power supply for N=2 magnetrons for industrial microwave generators. Journal of Physical and Chemical News. 54: 17-30.

[10] A.Belhaiba, N.Elghazal, M. Chraygane, M. Ferfra, B.Bahani, M. ould Ahmedou. 2012. Improved optimization of the Nominal Functioning of a High Voltage power supply N=2 mangnetrons for microwaves generators. International Journal of Electrical and Computer Engineering (IJECE). 2 (5): 708-716.

[11] M. Chraygane, M. Ferfra and B. Hlimi. 2006. Etude analytique et expérimentale des flux du transformateur à shunts d'une alimentation pour magnétron 800 Watts à 2450 Mhz. Journal of Physical and Chimical News. 27 : 31-42.

[12] Aguili T and Chraygane M. 1990. Une alimentation originale pour générateurs micro-ondes. Revue Générale de l'Electricité RGE n° 5, pp. 49-51 France.

[13] Ali Bouzit, Mohammed Chraygane, Naama El Ghazal, Mohammed Ferfra, M Bassoui. 2014. Modeling of New Single-Phase High Voltage Power Supply for Industrial Microwave Generators for N=2 Magnetrons. International Journal of Electrical and Computer Engineering (IJECE). 4(2): 223-230.

[14] Bahani Boubker, A. Bouzit, M. Chraygane, M. Ferfra, N. El Ghazal, A. Belhaiba. 2013. Modeling of a New Single-Phase High Voltage Power Supply for Microwave Generators with Three Magnetrons. International Journal of Electrical and Computer Engieeering (IJECE). 3(2): 164-170.

[15] A. Belhaiba, M. Ould. Ahmedou, M. Chraygane, M. Ferfra, N. Elghazal. 2012. Energy balance of optimized high voltage power supply for microwaves generators used in various industrial applications. International Review on Modelling and Simulations. 5(4): 1460-1469.

[16] Belhaiba, A. Bouzit, N. Elghaza1, M. Ferfra, M. Bousseta, M. Chraygane and B. Bahani. 2013. Comparative Studies of Electrical Functioning of Magnetron Power Supply for One Magnetron. Journal of Engineering Science and Technology Review. 6(3): 229-238.

[17] M. Ould. Ahmedou, M. Chraygane, M. Ferfra. 2010. New π Model Validation Approach to the Leakage Flux Transformer of a High Voltage Power Supply Used for Magnetron for the Industrial Micro-Waves Generators 800 Watts. International Review of Electrical Engineering (I.R.E.E.). 5(3): 1003-1010.

[18] Ahmedou, M.Ould. Ferfra M., Nouri R., Chraygane M. 2011. Improved π Model of the Leakage Flux Transformer Used for Magnetrons, International Conference on Multimedia Computing and Systems - Proceedings, art. No. 5945710. From Ourzazate, Morocco.

[19] M.Ould. Ahmedou, M. Ferfra, N.EL Gazal, M. Chraygane, M. Maaroufi. 2011. Implementation and Optimization under Matlab Code of a HV Power Transformer for Microwave Generators Supplying Tow Magnetrons, Journal of Theorical and Applied Information Technology. 33(2): 227-238.

[20] Chan J. H., Vladimirescu A., Gao X.C., Liebmann P., Valainis J. 1991. Non linear transformer model for circuit simulation. IEEE Transactions on Comuter-Aided. No. 4.

[21] Dick E.P., Waston W. 1991. Transformers models for transcient studies based on field measurements. IEEE Transactions, PAS-100, N0 1: 409-419.

[22] Naama El Ghazal, M. Chraygane, M. Ferfra, A. Belhaiba, M. Fadel, B. Bahani. 2013. Modeling of New Three-phase High Voltage Power Supply for Industrial Microwave Generators with One Magnetron per phase. International Journal of Electrical and Computer Engineering (IJECE). 3(2): 270-278.

[23] N. El Ghazal, A. Belhaiba, M. Chraygane, B. Bahani, M.Ould. Ahmedou, M.Ferfra. 2012. Feasibility study of a new three-phase HV powersupply for microwaves generators supplying a one magnetron per phase under MATLAB code. International Conference on Multimedia Computing and Systems, IEEE, 10.1109/ICMCS.2012.6320197 Publication. Year: 2012.